Reg. No. [ ] [ ] [ ] [ ] [ ] [ ] [ ] [ ] [ ] [ ] **[17EC56]**

FIFTH SEMESTER B.Tech EXAMINATION, DECEMBER–2019

CONTROL SYSTEM

Time: 3 Hours **Maximum Marks: 70**

Instructions: i. Answer any **FIVE** full Questions choosing at least two from each part.

ii. Missing data may be suitably assumed.

PART – A

1. a. What is control system? Distinguish between open loop and closed loop system. Give three examples for each system. **07**

b. Define transfer function. Write the differential equations governing the mechanical system shown in Fig. 1b and determine the transfer function. **07**

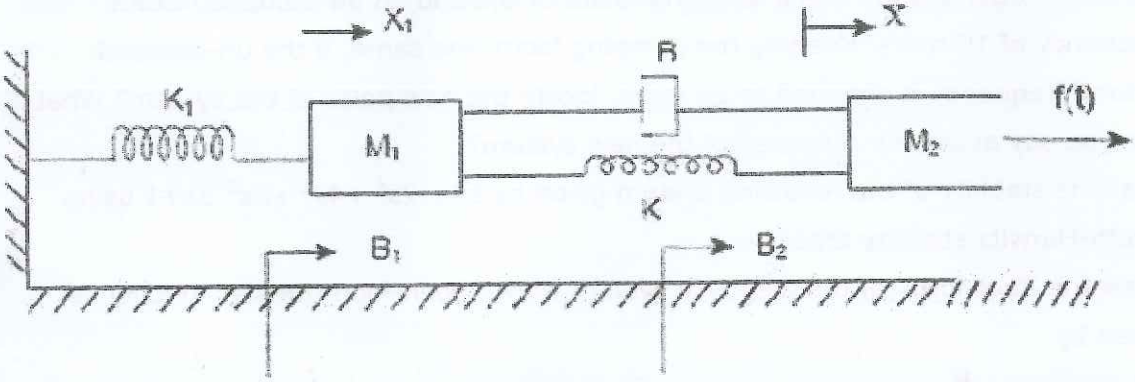

Fig.1b

2. a. Find the overall transfer function of the system given in Fig. 2a using Mason's gain formula. **09**

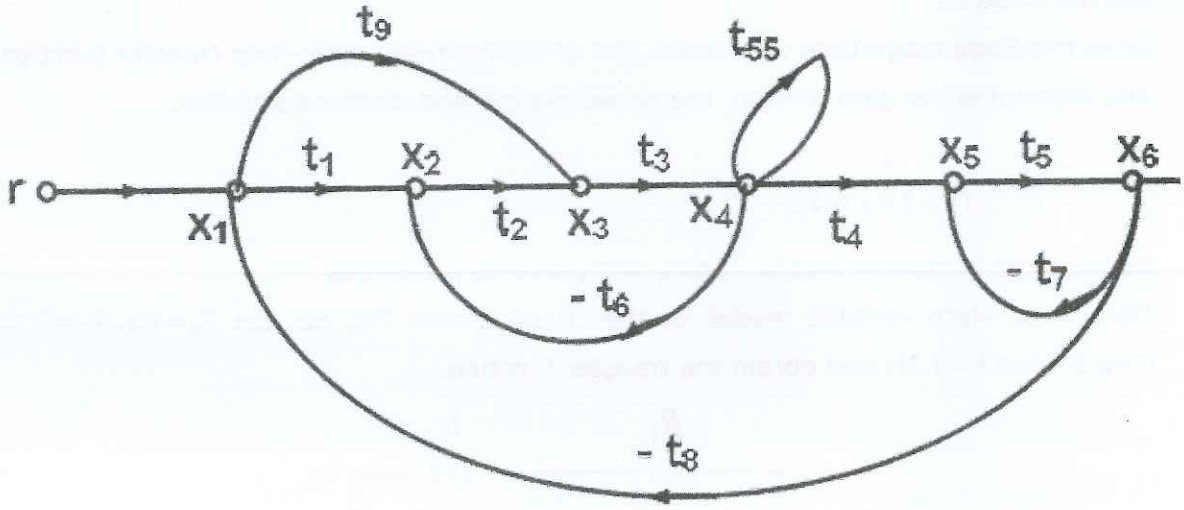

Fig. 2a

b. Find the SFG of following block diagram model shown in Fig. 2b. **05**

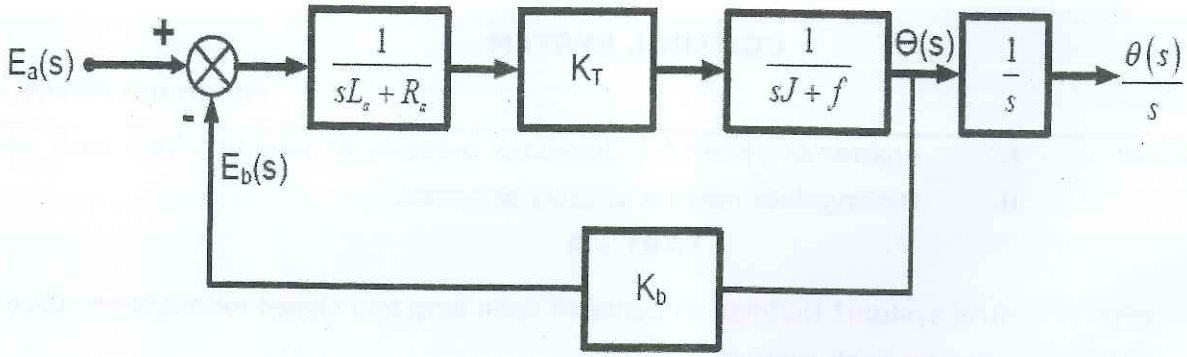

Fig. 2b

3. a. Derive the equation for steady state error in a closed loop control system. **06**

b. A second-order system has a damping factor of 0.3 and an un-damped natural frequency of 10 rad/s. Keeping the damping factor the same, if the un-damped natural frequency is changed to 20 rad/s, locate the new poles of the system? What can you say about the response of the new system? **08**

4. a. Examine stability of the following system given by $s^5 + 2s^4 + 4s^3 + 8s^2 + 3s + 1$ using Routh-Hurwitz stability criterion. **05**

b. Draw the Root-locus of the feedback system whose open-loop transfer function is given by **09**

$$G(s)H(s) = \frac{K}{s(s+1)}$$

Part B

5. a. What is frequency response in control system? Explain advantages of frequency domain analysis. **10**

b. Draw the Bode magnitude and phase plot of the following open-loop transfer function and determine the gain margin, the phase margin and absolute stability. **10**

$$G(s)H(s) = \frac{1}{s(s+2)(s+4))}$$

6 a. Define state transition matrix. State and prove its properties **07**

b. Obtain the state variable model for the circuit shown Fig. 6b. Let $R_1=1\Omega$, $R_2=2\ \Omega$, C=0.5F and L=0.2H and obtain the transfer function. **07**

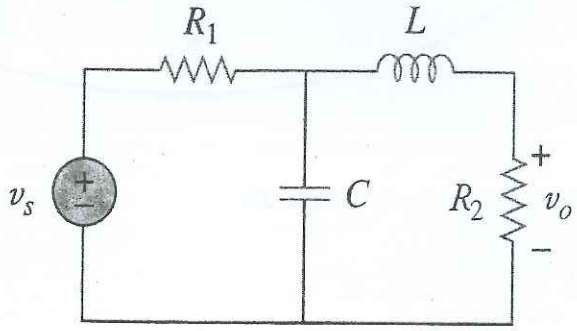

Fig. 6b

7. a. Explain Gilbert's method for checking controllability. **06**

b. Check whether the following state equation is **08**

i. Controllable

ii. Observable

$$\dot{x} = \begin{bmatrix} 0 & 1 & -1 \\ -1 & -1 & 1 \\ -1 & -1 & 0 \end{bmatrix} x + \begin{bmatrix} 0 \\ 1 \\ 0 \end{bmatrix} u, \qquad y = \begin{bmatrix} 1 & 0 & 1 \end{bmatrix} x$$

8. a. With a neat diagram explain the hydraulic operated devices in feedback control system. **06**

b. Describe the construction and working of a two phase motor suitable for use in AC servo systems. **08**